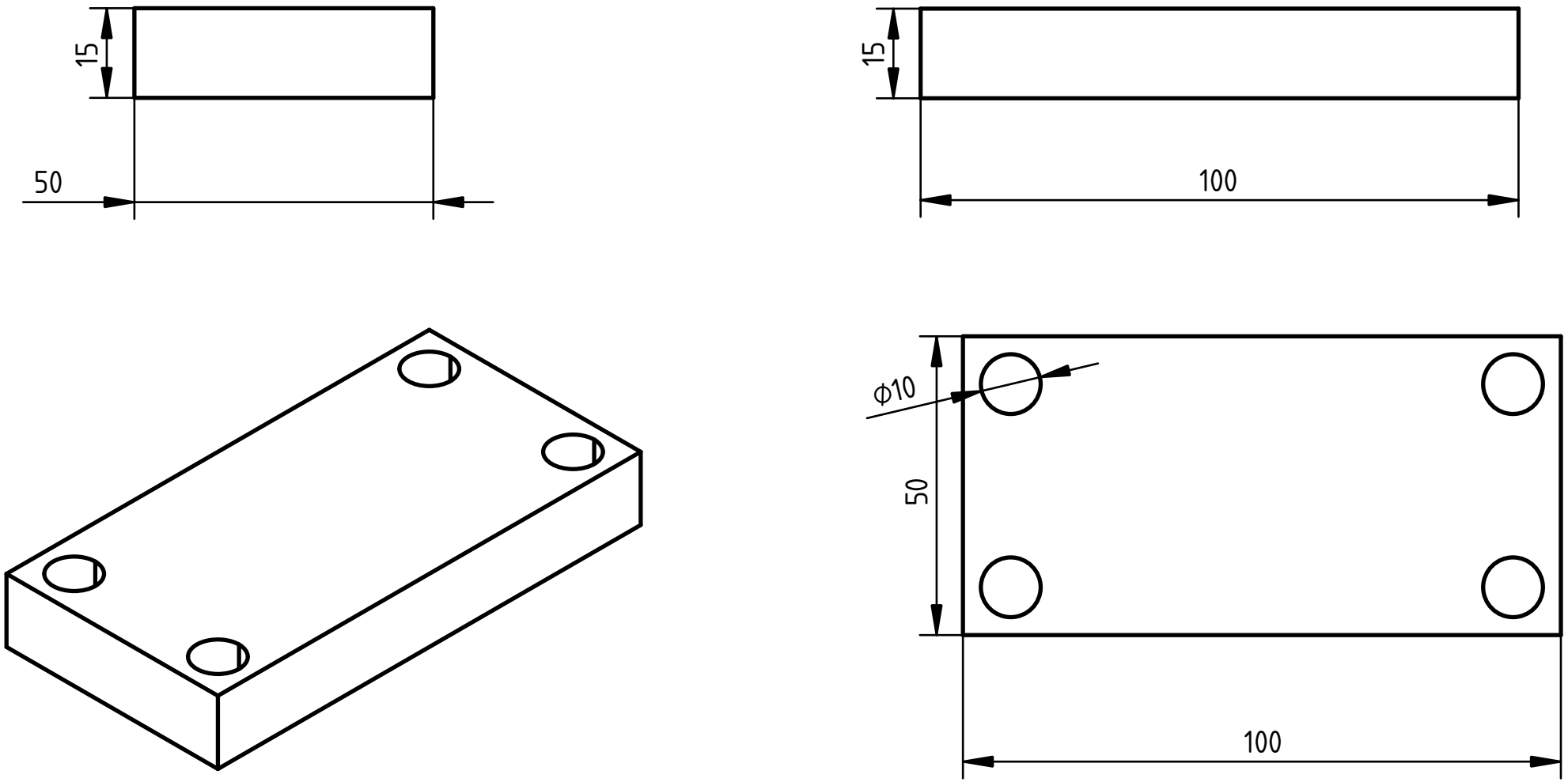

Author:DHRUVI PATEL Appr.: KEYUR SURATI	Legal owner: AMTICS	Scale:1:1 Toler.: +/- ?	Sheet:8 Size: A4
TITLE: ORTHOGRAPHIC AND ISOMETRIC PROJECTION OF FOUNDATION PLATE		Part material: Part number: Drawing no.:8	
Document type:PART DESIGN		Date: 2023-04-25	Revision: DIV-B
ALL DIMENSIONS ARE IN mm.			